NORTH BAYOU

G200

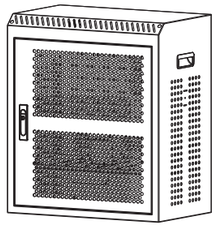

http://www.nbavmount.com.cn E-mail:info@nbavmount.com

A	B	C	D	E	F	G	H	I
2X	2X	4X	4X	2X	4X	4X	1X	2X

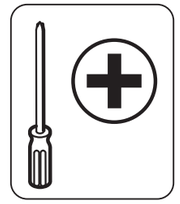

G200适应产品类型:
AV cabinet G200 can be added onto our following TV cart models and become mobile workstations.

AVF1500-50-1P
AVF1500-60-1P
T70
T52-2A
AVF1800-70-1P
CF100
AVT1800-100-1P
AVT1800-60-2A
CA100

安装在单立柱上需 2 人
Install on single post needs 2 persons
} **AVF1500-50-1P** **AVF1500-60-1P** **T70** **T52-2A**

单立柱 Single post

Step 1

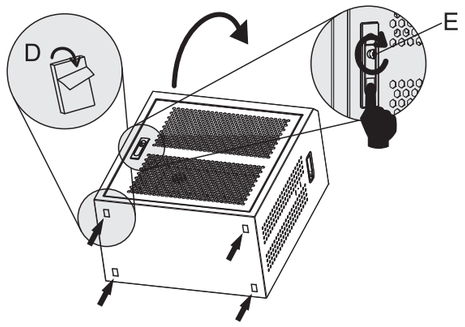

Step 2

Step 3

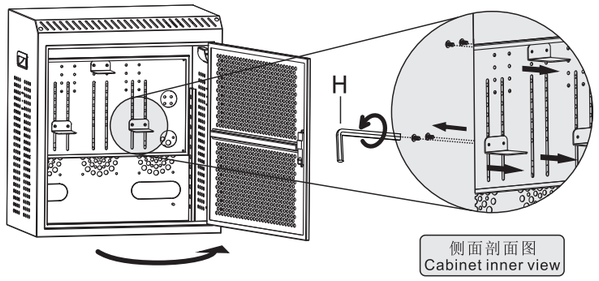

Step 4

Step 5

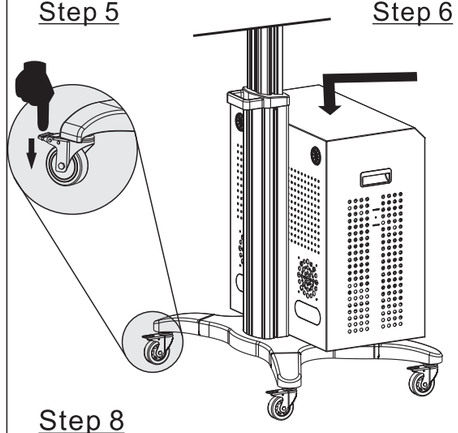

Step 6

Step 7

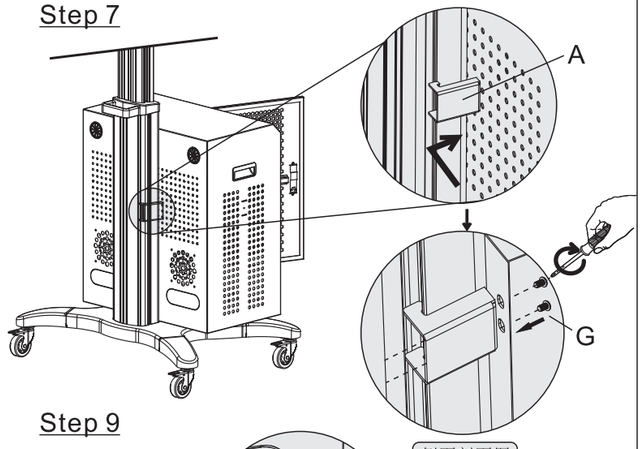

Step 8

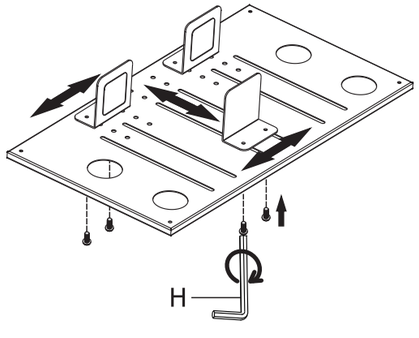

Step 9

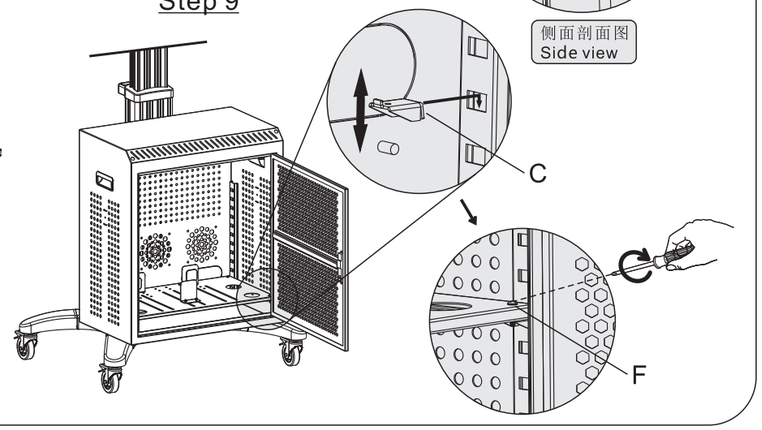

安装在双立柱上需 2 人
Install on dual posts needs 2 persons
} **AVF1800-70-1P**

双立柱 Dual posts

Step 1

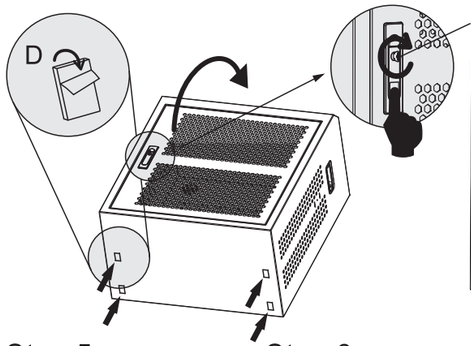

Step 2

Step 3

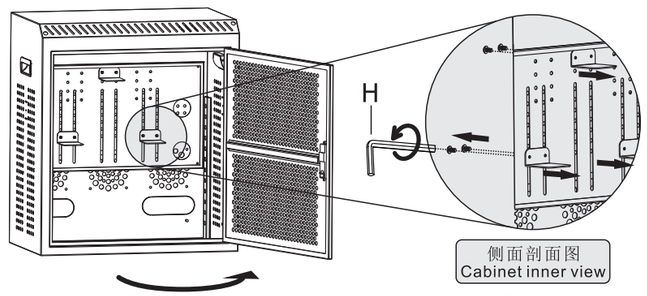

Step 4

Step 5

Step 6

Step 7

Step 8

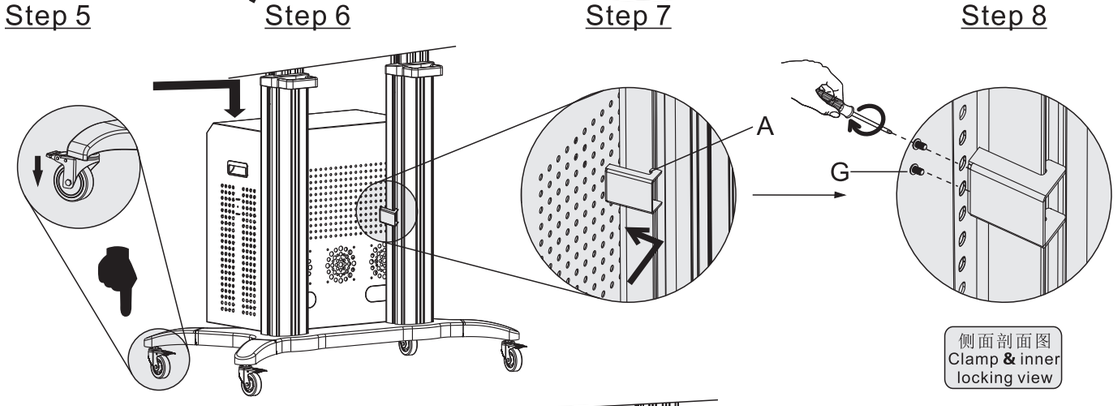

Step 9

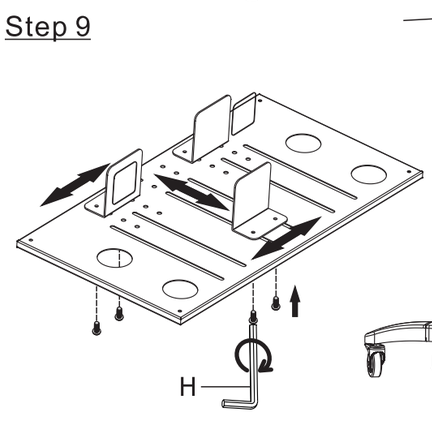

Step10

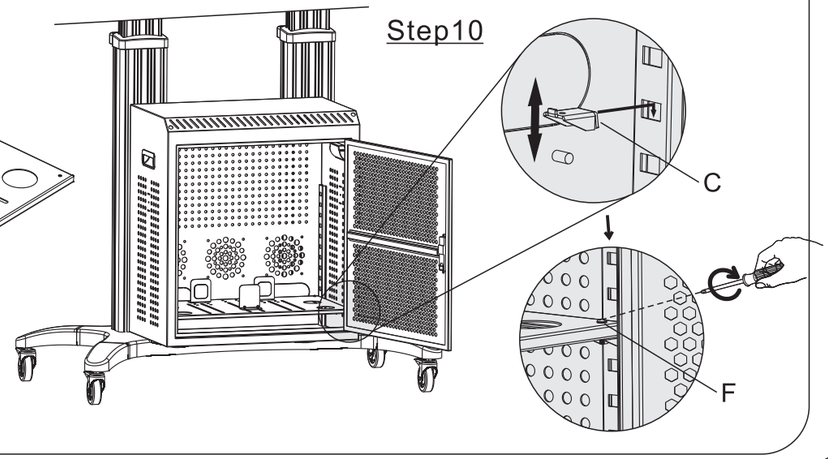

4001069401 A3 - G200

NORTH BAYOU

G200

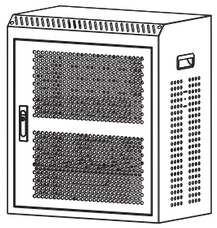

http://www.nbavmount.com.cn E-mail:info@nbavmount.com

A	B	C	D	E	F	G	H	I
2X	2X	4X	4X	2X	4X	4X	1X	2X

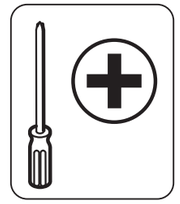

G200适应产品类型:
AV cabinet G200 can be added onto our following TV cart models and become mobile workstations.

AVF1500-50-1P
AVF1500-60-1P
T70
T52-2A
AVF1800-70-1P
CF100
AVT1800-100-1P
AVT1800-60-2A
CA100

安装在双立柱上需 2 人
Install on dual posts needs 2 persons } **CF100**

双立柱 Dual posts

Step 1 Step 2 Step 3 Step 4

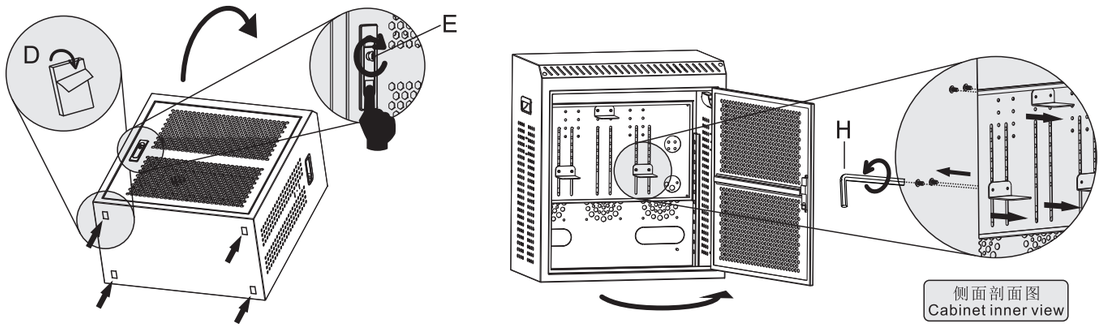

Step 5 Step 6 Step 7

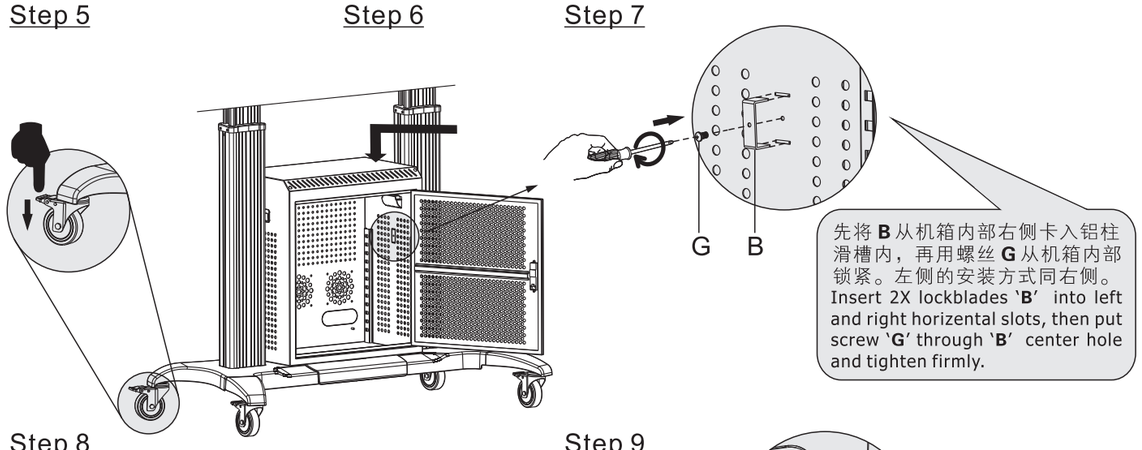

Step 8 Step 9

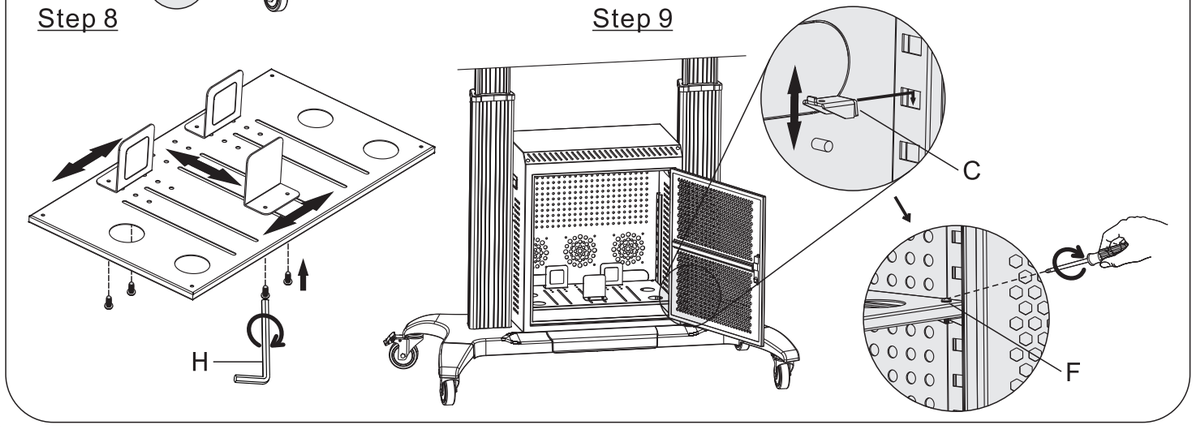

安装在双立柱上需 2 人
Install on dual posts needs 2 persons } **AVT1800-100-1P, AVT1800-60-2A, CA100**

双立柱 Dual posts

Step 1 Step 2 Step 3 Step 4

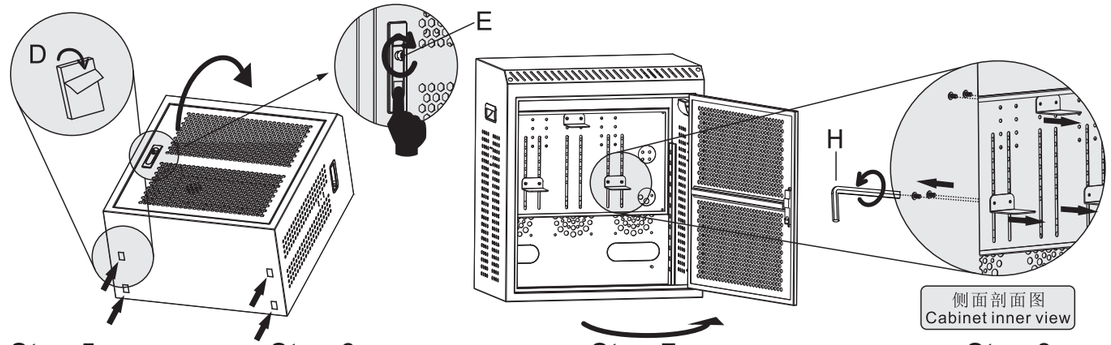

Step 5 Step 6 Step 7 Step 8

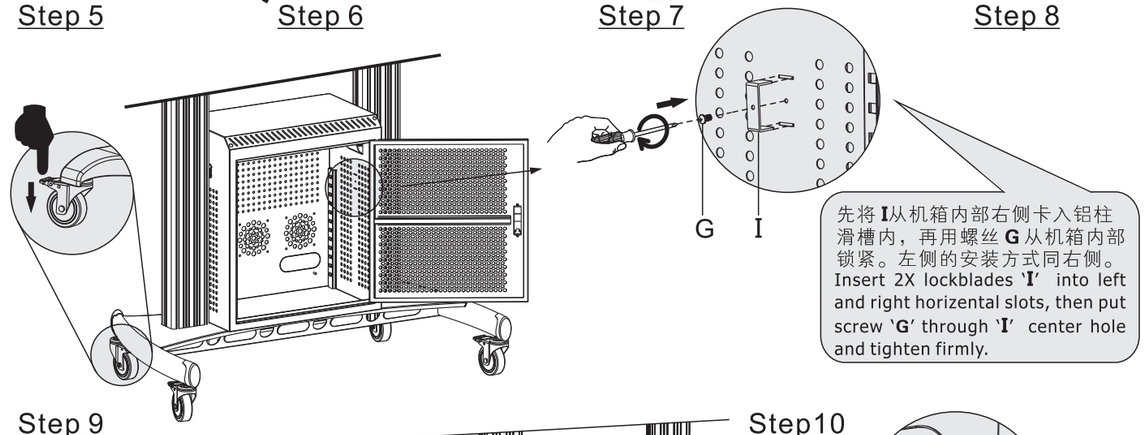

Step 9 Step10

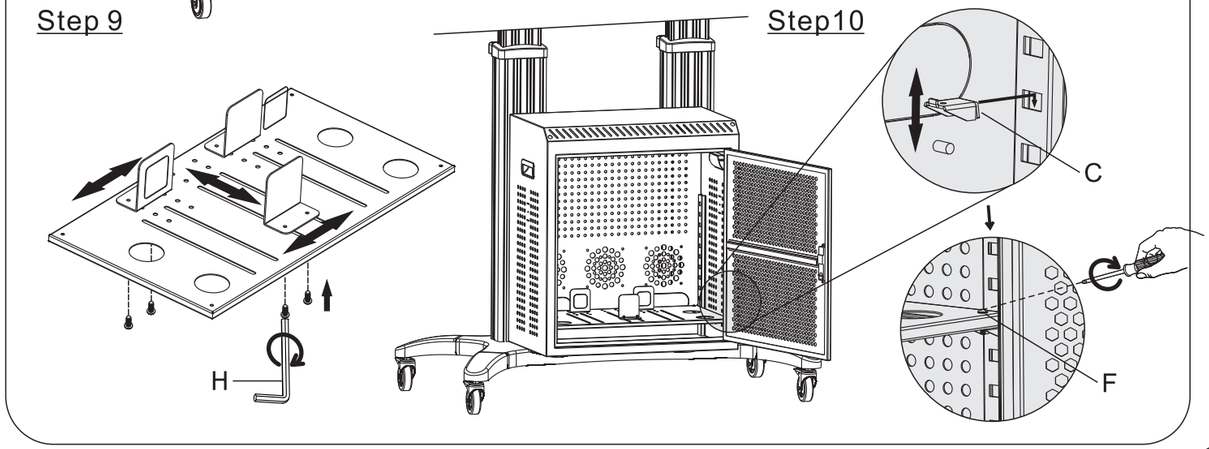

4001069401 A3 - G200